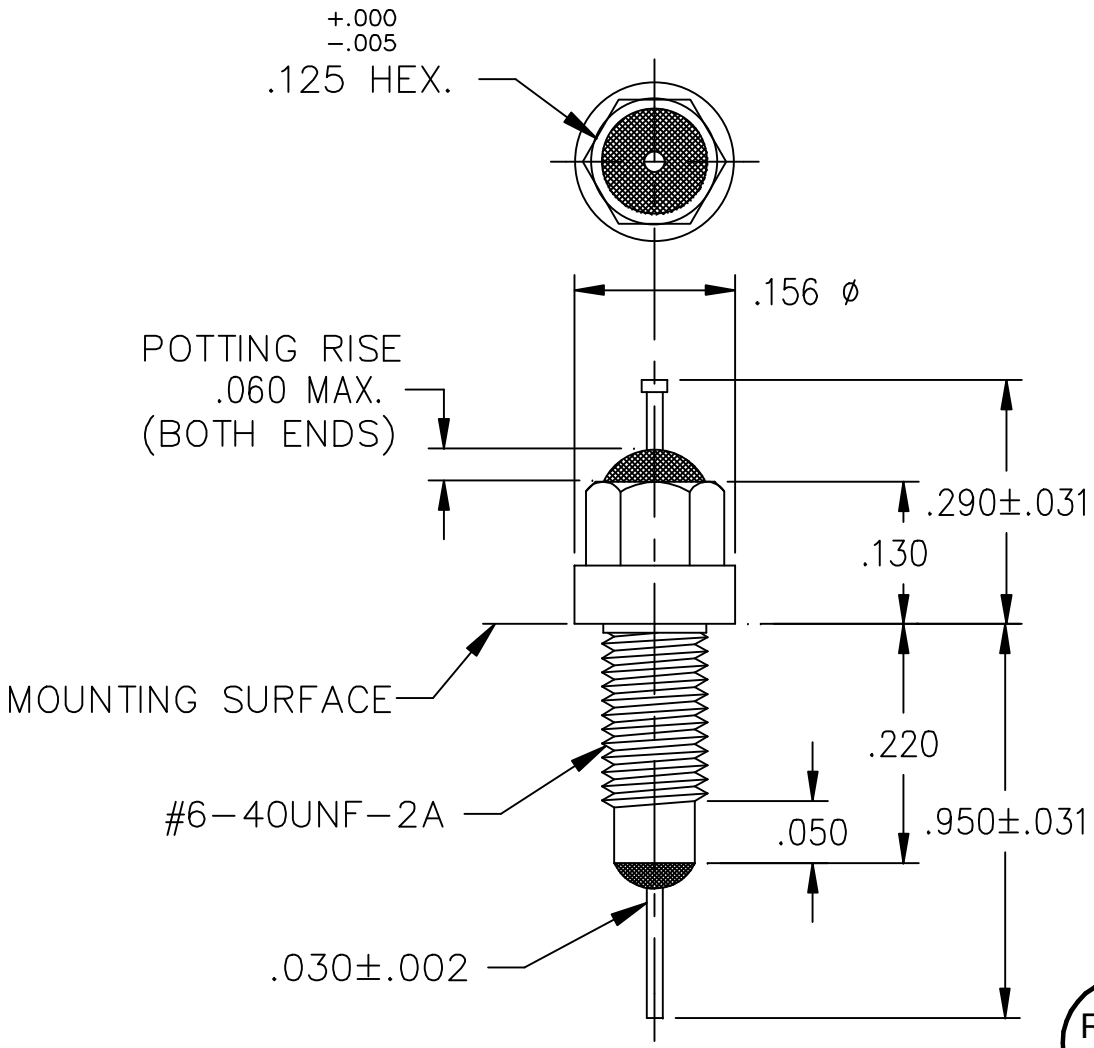

BUSHING FINISH:	SILVER
LEAD FINISH:	SILVER
CAPACITANCE	1500 pF GMV
TEMP. RANGE	−55°C TO 125°C
CURRENT	10 AMP MAX.
DCR	.01 Ω MAX.
WORKING VOLTAGE	85°C 200 VDC 125°C 200 VDC

MIN. IL PER MIL−STD−220, 25°C, NO LOAD

FREQ. (MHz)	dB
10	5
100	40
1GHz	60
10GHz	60

SCHEMATIC

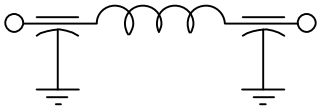

MARKING:
PART : 89001
BAG : 1289F−001
DATE CODE
QTY./BAG (200 MAX.)

RoHS COMPLIANT

NOTES:
1. HARDWARE IS INCLUDED
2. THIS IS A LEAD FREE PRODUCT.
3. MAX REFLOW IS 245° FOR 5 SEC.

								CN 30514−CPD 00	REV. NO.	TOLERANCES UNLESS OTHERWISE SPECIFIED
									CHANGE NOTICE	Fractions ± 1/64
										Dec. .xx±
										Dec. .xxx± .010
										Angles ±0° 30′
										CODE IDENT. NO. 0LSP2

SPECTRUM CONTROL INC.

ERIE, FAIRVIEW PENNSYLVANIA

Dwn. J.KAUFFMAN
Ckd. 9−19−06
Apvd. R. Struchen
Scale NONE

Description
FILTER

1289F−001