CASE FINISH	CURRENT (AMPS)	WORKING VOLTAGE				MAXIMUM DC RESISTANCE (OHMS)	MAXIMUM VOLTAGE DROP		MINIMUM CAPACITANCE (uF)	MIN. INSERTION LOSS PER MIL-STD-220, FULL LOAD, +25°C												
		-55°C TO +85°C		-55°C TO +125°C																		
		AC	DC	AC	DC		DC	AC		14 KHz	30 KHz	50 KHz	75 KHz	100 KHz	150 KHz	300 KHz	500 KHz	1 MHz	10 MHz	100 MHz	1 GHz	10 GHz
SOLDER	1.0	--	--	--	100	--	0.25	--	--	--	--	--	--	--	33	52	--	80	80	--	70	--

PART MARKING:
M15733/25-0002
OLSP2 125°C
100VDCW 1A
51-311-308
DATE CODE

PACKAGE MARKING:

STANDARD

MARKING NOTES:

N/A

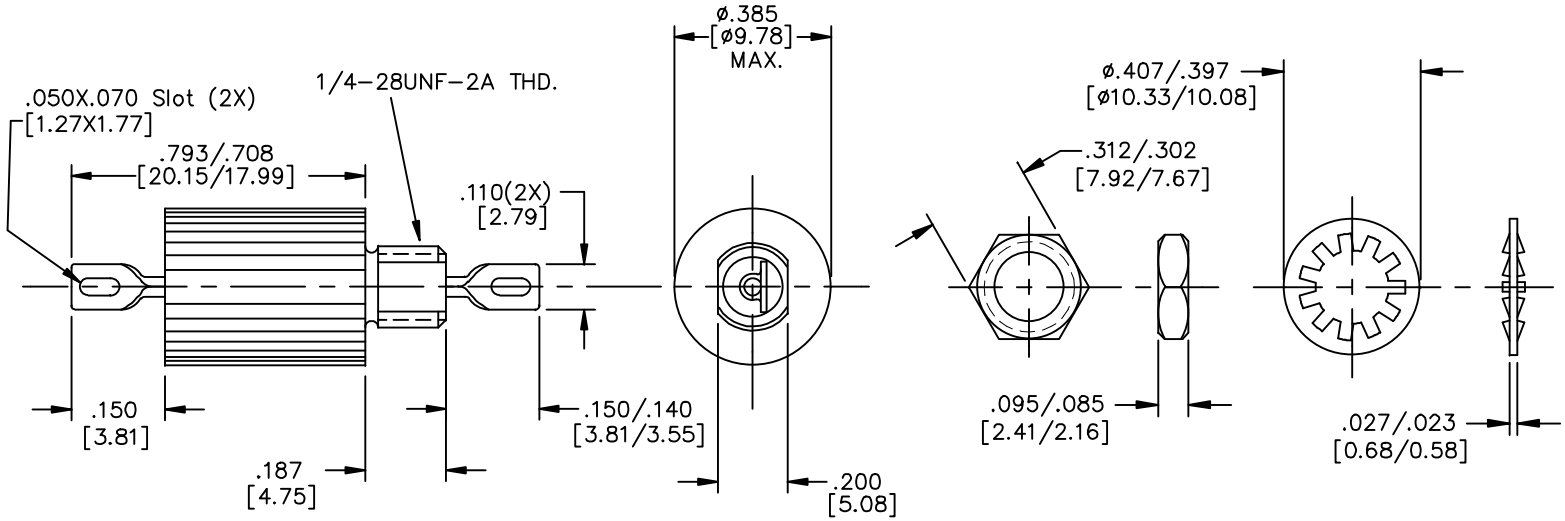

SCHEMATIC

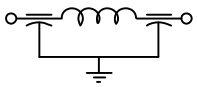

MTG. HARDWARE

47 THIS PART IS CODED **"NCA".** SPECTRUM CONTROL, INC. DOES NOT HAVE CHANGE AUTHORITY. CUSTOMER APPROVAL REQUIRED BEFORE PRODUCT/PROCESS CHANGES CAN BE MADE.

NOTES:
1) MOUNTING TORQUE NOT TO EXCEED 7in-lbs.

REV. NO.	CHANGE NOTICE
47	CN 58738-ENG
46	CN 194454
45	CN 183752 REDRAWN

UNLESS OTHERWISE SPECIFIED DIMENSIONS ARE IN INCHES [MILLIMETERS]

DO NOT SCALE

THIRD ANGLE PROJECTION

TOLERANCES UNLESS OTHERWISE SPECIFIED
Fractions ±
Dec. .xx±
Dec. .xxx± .010
Angles ±0° 30'

CODE IDENT. NO. OLSP2

SPECTRUM CONTROL INC.

FAIRVIEW PENNSYLVANIA

Dwn. MAYNARD
Date 3/25/98
Ckd. McALEVY
Sheet 1 of 1

Description Low Pass EMI Filter

51-311-308

Quality Products From The Specialists In Electro-Magnetic Compatibility